Compact Solar Light

SUN-CSL500536
SUN-CSL300318

Compact Solar Light
Compact design integrated with solar, LED, and battery
Easy construction does not choose installation location
Solar panels can be adjusted in angle front, rear, right and left
Adopted lithium iron phosphate ion battery for storage battery

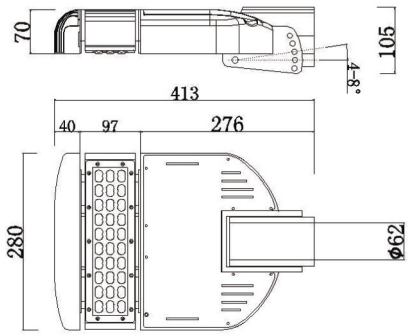

Specification	***SUN-CSL300318***	***SUN-CSL500536***
Solar cell	Single crystal silicon 30W	Single crystal silicon 50W
	530 x 450 x 25 mm	680 x 540 x 30 mm
Storage battery	lithium iron phosphate lithium ion battery 12.8V / 18A	12.8V / 36A
Light source	30 LED	
Controller	Charge / discharge control lighting time · Brightness can be set	
Body	Aluminum	
Bracket	Steel material	
Paint color	Silver · Black	